CORNER DETAIL

14" FLAT CORNER
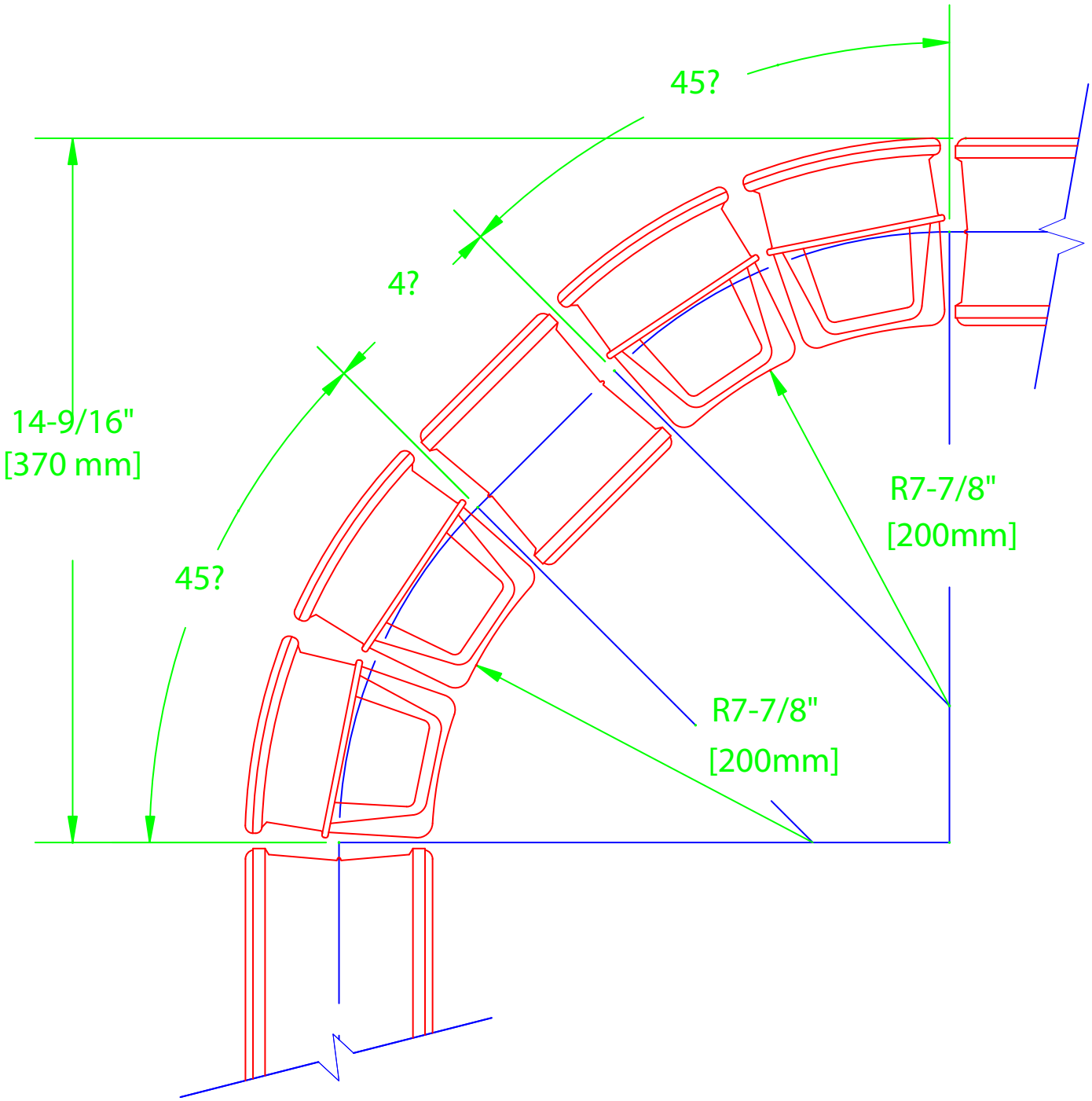
ALLBEND BLOCK 8"X3-7/8"